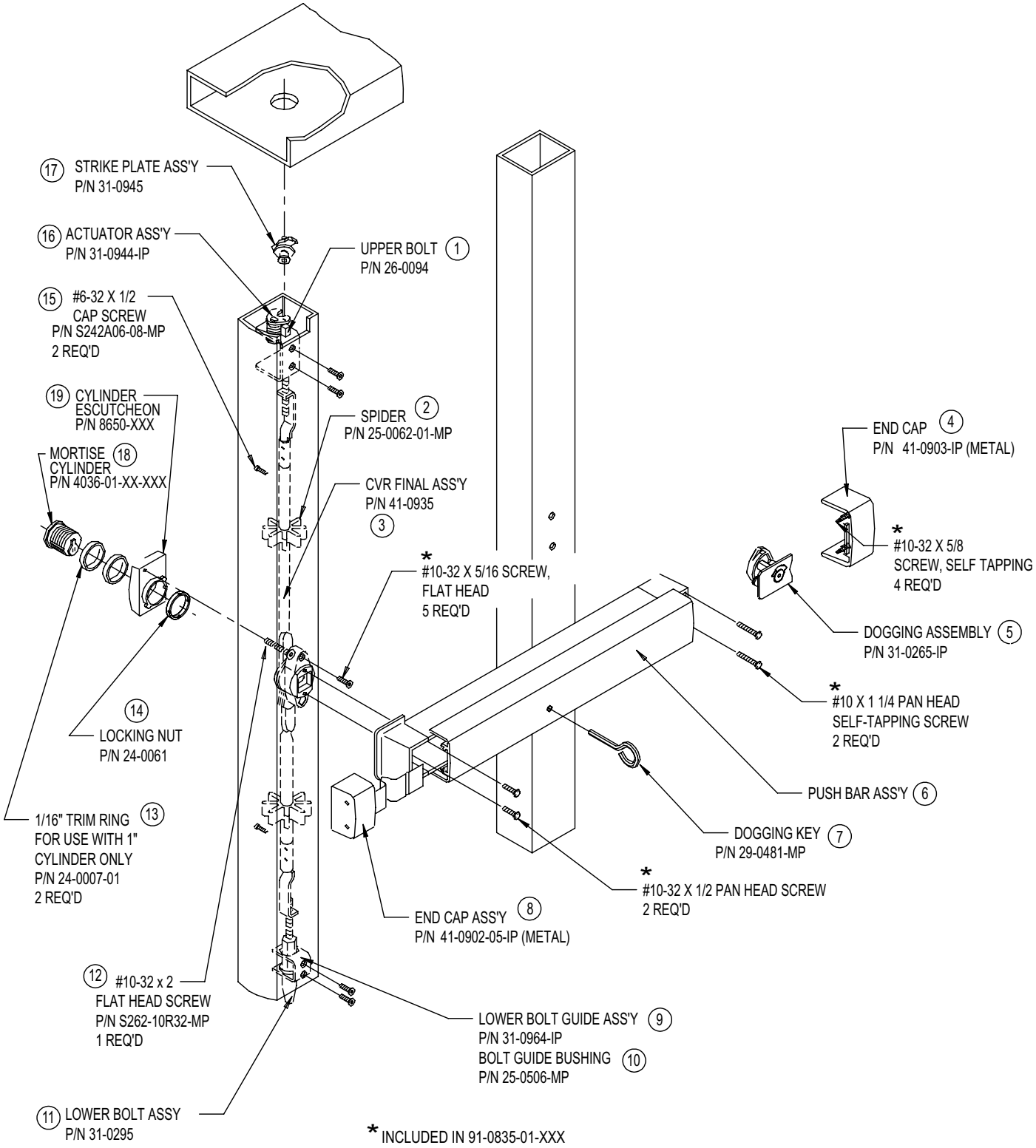
17 STRIKE PLATE ASS'Y
P/N 31-0945
16 ACTUATOR ASS'Y
P/N 31-0944-IP
UPPER BOLT 1
P/N 26-0094
15 #6-32 X 1/2
CAP SCREW
P/N S242A06-08-MP
2 REQ'D
19 CYLINDER
ESCUTCHEON
P/N 8650-XXX
SPIDER 2
P/N 25-0062-01-MP
END CAP 4
P/N 41-0903-IP (METAL)
MORTISE 18
CYLINDER
P/N 4036-01-XX-XXX
CVR FINAL ASS'Y
P/N 41-0935
3
*
#10-32 X 5/8
SCREW, SELF TAPPING
4 REQ'D
*
#10-32 X 5/16 SCREW,
FLAT HEAD
5 REQ'D
DOGGING ASSEMBLY 5
P/N 31-0265-IP
*
#10 X 1 1/4 PAN HEAD
SELF-TAPPING SCREW
2 REQ'D
14
LOCKING NUT
P/N 24-0061
PUSH BAR ASS'Y 6
1/16" TRIM RING 13
FOR USE WITH 1"
CYLINDER ONLY
P/N 24-0007-01
2 REQ'D
DOGGING KEY 7
P/N 29-0481-MP
*
#10-32 X 1/2 PAN HEAD SCREW
2 REQ'D
END CAP ASS'Y 8
P/N 41-0902-05-IP (METAL)
12 #10-32 x 2
FLAT HEAD SCREW
P/N S262-10R32-MP
1 REQ'D
LOWER BOLT GUIDE ASS'Y 9
P/N 31-0964-IP
BOLT GUIDE BUSHING 10
P/N 25-0506-MP
11 LOWER BOLT ASSY
P/N 31-0295
* INCLUDED IN 91-0835-01-XXX